TECHNICAL BULLETIN INDEX
Sorted by Bulletin Number
04/03/86

No.	Catalog	Description	Rev. Date
VID:001	26-3212	To prevent local interference with FM broadcasts.	09/19/85
VID:002	N/A	Modification to cure video shrink on TCE board.	01/04/86

DATE: September 19, 1985

REVISION DATE: September 19, 1985

BULLETIN NO: VID:1

PRODUCT: 26-3212 CM2 Video Monitor

SUBASSEMBLY: AZ-7161 Rear Cabinet with shield

PURPOSE: To prevent local interference with FM broadcasts.

DISCUSSION: The CM2 color monitor has a shield molded inside of the rear cabinet. On the shield there is a grounding tab which makes contact with the metal bracket that the RGB and AC cables run through. The ground is connected by a screw which is inserted through the rear cabinet into the bracket. This ground is nessecary to prevent noise interference. The grounding tab may be missing or bent away from the metal bracket causing a lack of ground to the shield.

PROCEDURE:

1. Remove the rear cabinet of the CM2.

2. Check the shield inside the rear cabinet to insure that the grounding tab is not missing or bent away from bracket. (Refer to figure 1)

3. Check the RGB cable to insure proper grounding to the metal mounting bracket with the clamp provided. (Refer to figure 1)

4. Install the rear cabinet and align the grounding tab to the metal mounting bracket. Fasten the two pieces together with a screw which is provided for making proper ground.

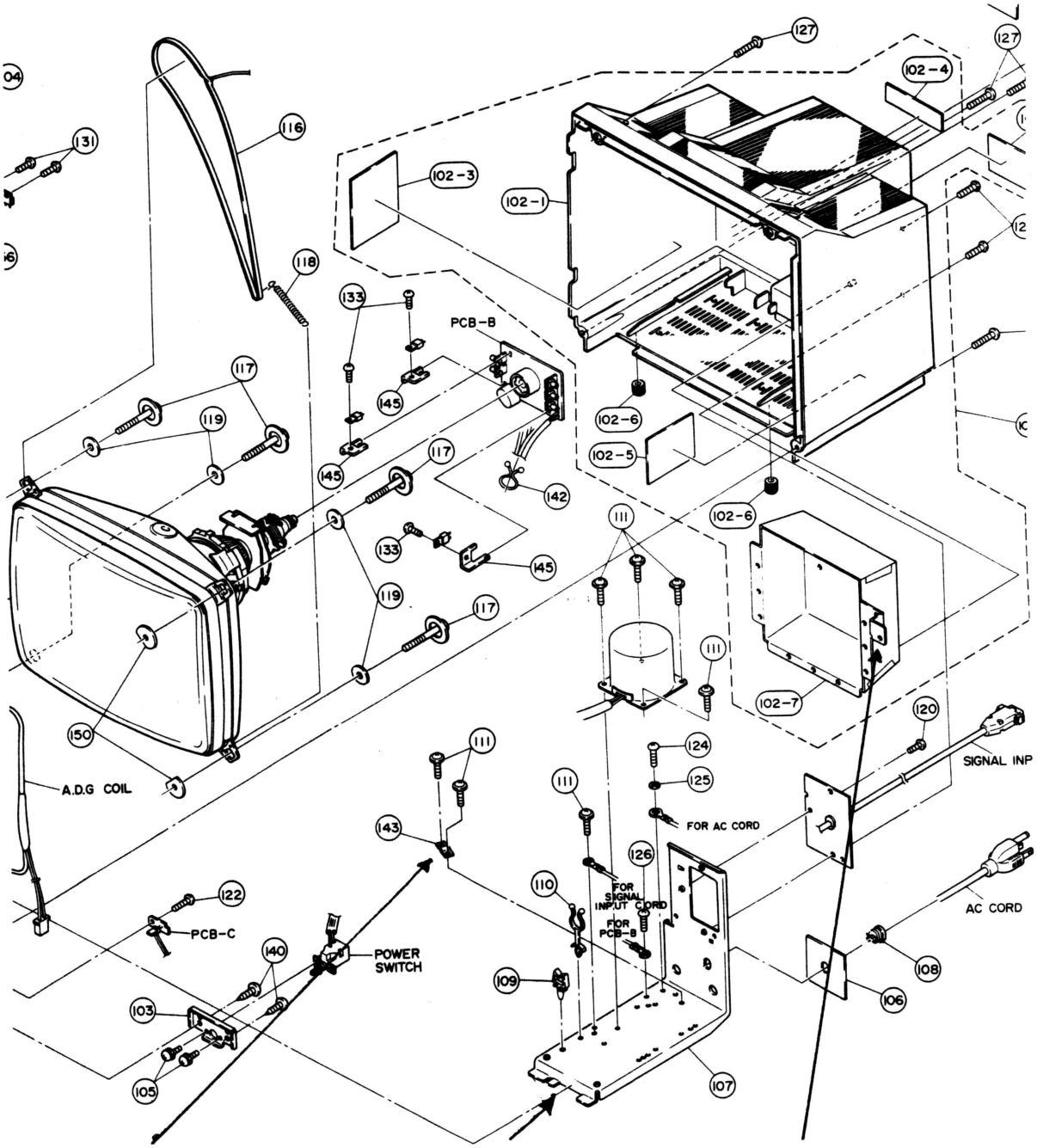

Grounding clamp Mounting Bracket Shield with Grounding Tab

Figure 1

DATE: January 4, 1986

REVISION DATE: January 4, 1986

BULLETIN NO: VID:2

PRODUCT: TCE Video Monitor Board 8790615

SUBASSEMBLY: AX-9458

PURPOSE: To describe a modification to cure video shrink.

DISCUSSION: This modification should be applied to any TCE 8790615 board which exhibits severe shrink problems. A 12 volt regulator has been added between the flyback transformer and pin 12 of IC 201. The illustrations included with this bulletin will help clarify the procedure. Before performing this modification, check the board carefully. Later versions already have these changes incorporated. Look for IC202 and C212. If these components are present, the board does not need to be modified. The area marked with an asterisk on the drawing shows where these parts will be located if they are present. This monitor board will be found in Model 4 Gate Array and Model 4P computers. Other TCE boards may also be found in these machines, however. Carefully check for the number 8790615 before performing any work.

PROCEDURE:

1. Lift the anode side of D201.
2. Lift the positive side of capacitor C211.
3. Connect the anode of D201 and the positive side of C211 together.
4. Lift wire jumper J204.
5. Connect a wire between the connection in step 3 and resistor R214. (An easy way to make the connection to R214 is to use the hole previously occupied by one end of J204. Use the hole closest to R214.)
6. Connect the positive lead of a 47uf 16V electrolytic capacitor to R212. Connect the other end to ground. Use the points shown in the illustrations.
7. Connect a 78L12 voltage regulator according to the illustration. Be certain to insulate the leads of the regulator so they do not short to anything else on the board.

The following Radio Shack part numbers apply to this bulletin:

Part Description	RS Part Number	Catalog Number
1. 47uf 16V Electrolytic Capacitor	CC-476MDNP	26-9999C
2. 78L12 Voltage Regulator	MX-6515	26-3128

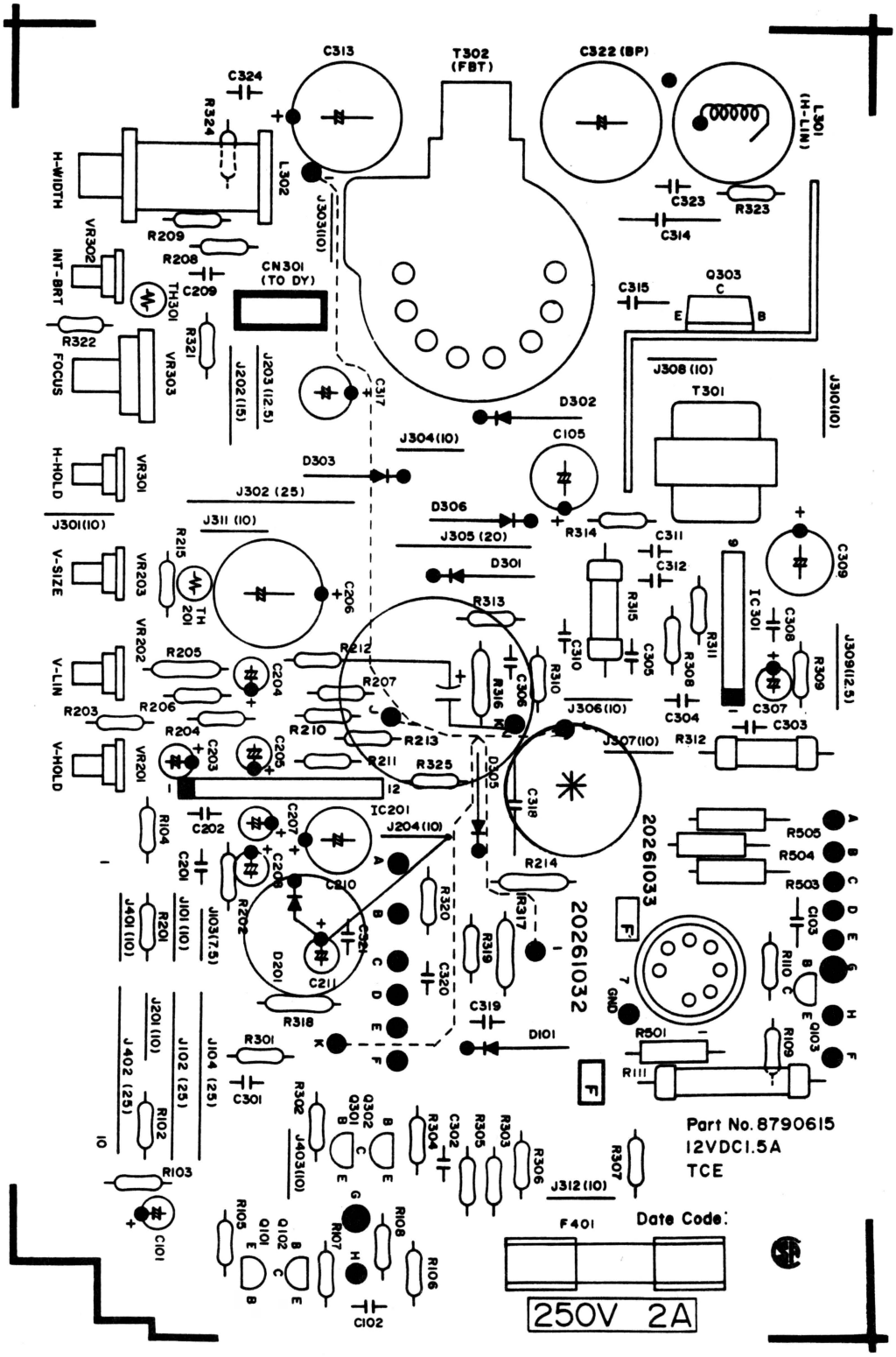
C313
T302 (FBT)
C322 (BP)
L301 (H-LIN)
C324
R324
L302
H-WIDTH
R209
R208
C209
CN301 (TO DY)
VR302
INT-BRT
TH301
R322
FOCUS
VR303
R321
J202 (15)
J203 (12.5)
C317
J303(10)
C323
R323
C314
C315
Q303
J308 (10)
T301
J310(10)
D302
J304(10)
C105
D303
H-HOLD
VR301
J302 (25)
D306
R314
J301(10)
J311 (10)
J305 (20)
C311
C312
C309
V-SIZE
VR203
R215
TH 201
C206
D301
R313
R315
IC 301
C308
J309(12.5)
VR202
R205
R212
R207
R316
C306
R310
C310
C305
R311
R308
R309
V-LIN
R203
R206
R210
R213
J306(10)
C304
C307
R204
C203
C205
R211
R325
D305
J307(10)
R312
C303
V-HOLD
VR201
IC201
J204(10)
C318
R104
C202
C207
C208
R214
R505
R504
R503
C201
C210
R202
R320
IR317
20261033
20261032
J401 (10)
R201
J101 (10)
J103(7.5)
C321
D201
R319
C320
C103
R110
Q103
C211
R318
C319
R501
R109
J201 (10)
J102 (25)
J104 (25)
R301
D101
R111
J402 (25)
C301
R302
Q302
Q301
R304
C302
R305
R303
R306
R307
Part No. 8790615
12VDC1.5A
TCE
R102
J403(10)
J312(10)
R103
Date Code:
C101
R105
Q101
Q102
R107
R108
R106
F401
C102
250V 2A

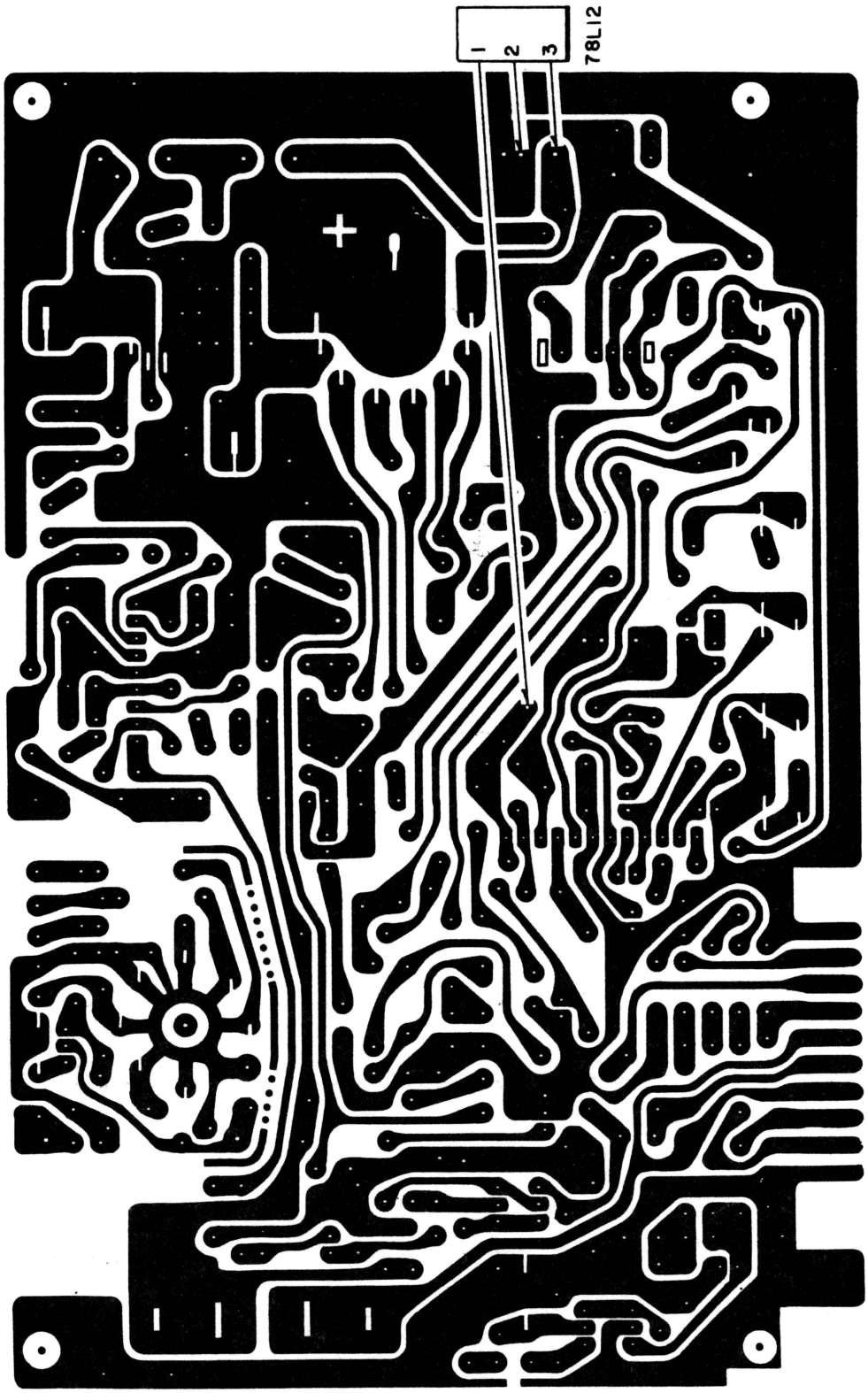
1
2
3
78L12

DATE: June 11, 1986

REVISION DATE: June 11, 1986

BULLETIN NO: VID:3

PRODUCT: 25-3Ø45 Dual Display Adapter

SUBASSEMBLY: AX-Ø126

SUBASSEMBLY REVISION: Rev. A boards (PCB no. 87Ø9692)

PURPOSE: To improve sharpness of the video display.

DISCUSSION: This bulletin details modifications to improve the sharpness of the Dual Display Adapter. In addition, some 74LS367's used for U13 do not have a fast enough rise time.

PROCEDURE: Check U13, if U13 is not a Motorola or Signetics 74LS367, replace it with one from one of these manufacturers. Replace C17 with a 47PF ceramic capacitor and install a 1K ohm 1/4 watt resistor between U13 pin 3 and U13 pin 8. Test the board with the Dual Display Graphics Adapter test on the Supplemental Diagnostics Disk, part number AXX-2Ø53.

These parts can be ordered under:

74LS367 (Signetics)	AMX-3567	25-3Ø45
47PF cap	CC47ØJJCA	26-9999C
1K resistor	NØ196EEC	26-9999R

DATE: December 11, 1986

REVISION DATE: December 11, 1986

BULLETIN NO: VID:5

PRODUCT: 25-3Ø45 Dual Display Graphics Adapter

SUBASSEMBLY: AX-Ø126 Entire Board

SUBASSEMBLY REVISION: Rev. A, Rev. B

PURPOSE: To correct video jitter which dissipates as the computer warms up.

DISCUSSION:

Some versions of the gate array video IC used on the DDGA board may produce odd video jittering when they are first powered up. This effect usually dissipates as the computer in which the DDGA board is installed warms up. This problem may be eliminated by delaying the HS_OUT signal by one clock cycle.

PROCEDURE:

To perform this modification, you will need:

1 (one) 74F74, part # MX-5936, cat. # 25-3Ø47
Kynar wire

(1) On the 74F74, cut off pins 1-6 and pin 8.

(2) On the 74F74, bend up pins 9, 11, 12, and 13. Cut off the narrow portion of the pins.

(3) On the 74F74, jumper pin 13 to pin 14.

(4) On the 74F74, solder a two inch long piece of Kynar wire to pin 12.

(5) On the 74F74, solder a two inch long piece of Kynar wire to pin 9.

(6) On the 74F74, solder a 1.25 inch long piece of Kynar wire to pin 11.

(7) On the DDGA board, remove the solder from the feedthrough located between U9 pin 14 and U3 pin 12. (See Figure 1.)

---

(8) On the DDGA board, remove the solder from the feedthrough located between U9 pin 11 and U3 pin 14. (See Figure 1.)

(9) On the DDGA board, cut the trace from U11 pin 53 to U8 pin 2 on the solder side.

(10) Solder the 74F74 onto U9 on the DDGA board at pin 7, 10, and 14.

(11) Pass the wire connected to pin 12 on the 74F74 through the empty feedthrough between U9 pin 14 and U3 pin 12.

(12) Pass the wire connected to pin 11 on the 74F74 through the empty feedthrough between U9 pin 11 and U3 pin 14.

(13) Solder the wire connected to pin 9 on the 74F74 to U13 pin 4 on the component side.

(14) Solder the wire passed through the feedthrough between U9 pin 14 and U3 pin 12 to U11 pin 52 on the solder side. This wire is connected to pin 12 on the 74F74.

(15) Solder the wire passed through the feedthrough between U9 pin 11 and U3 pin 14 to the feedthrough located between U8 pin 6 and U8 pin 15 on the solder side of the board. This wire is connected to pin 11 on the 74F74.

After completing the modification, test the board using the appropriate diagnostics.

Figure 1

Clear these feedthroughs:

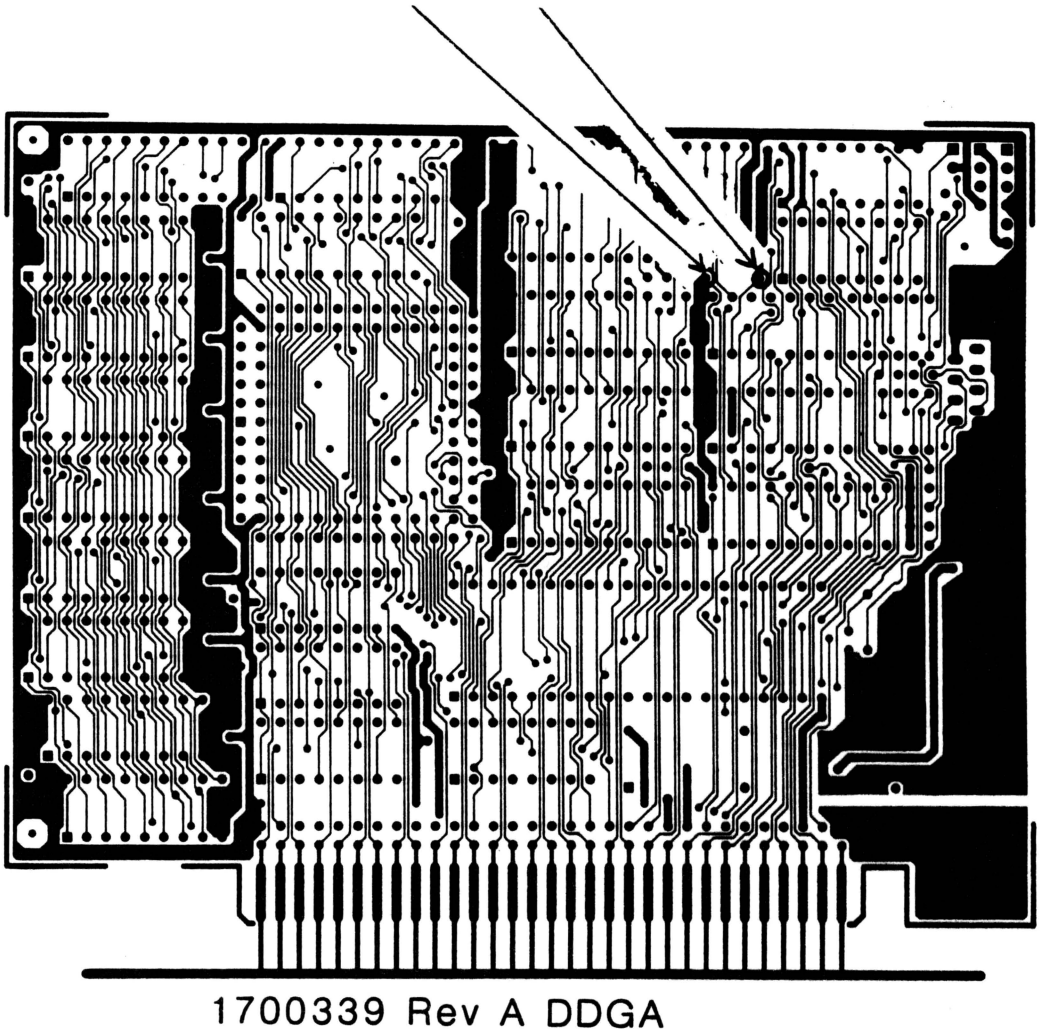

Component Side